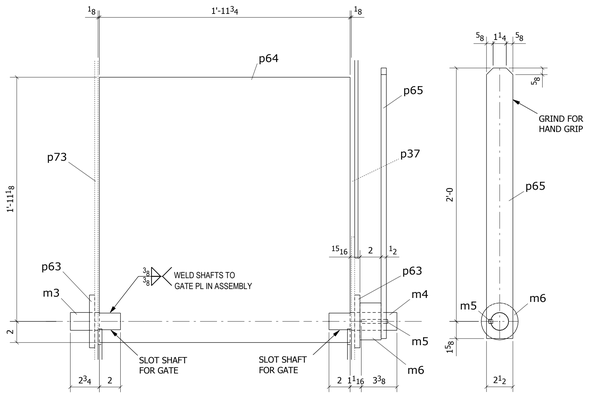

DETAIL OF GATE

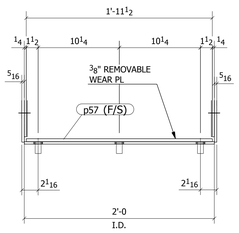

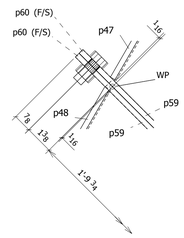

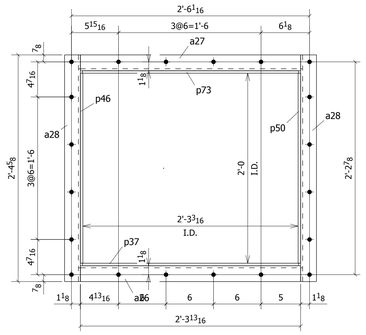

SECT. A - A

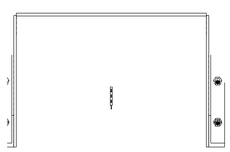

SECT. B - B

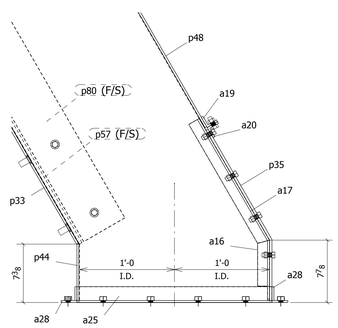

PARTIAL BACK SIDE VIEW

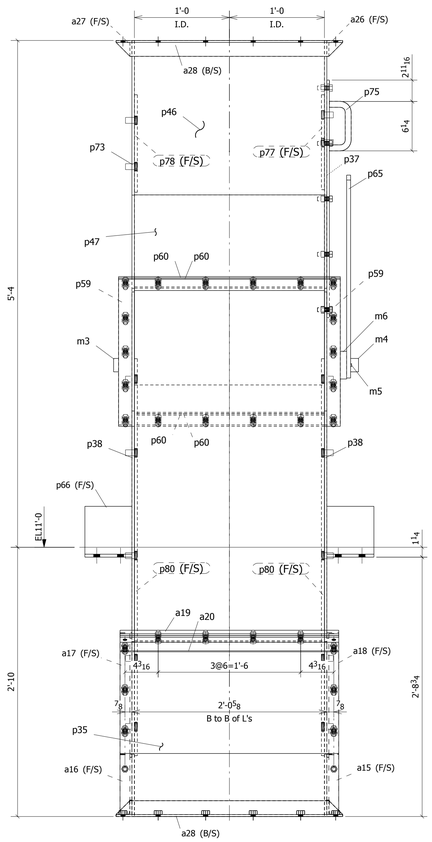

LEFT SIDE VIEW

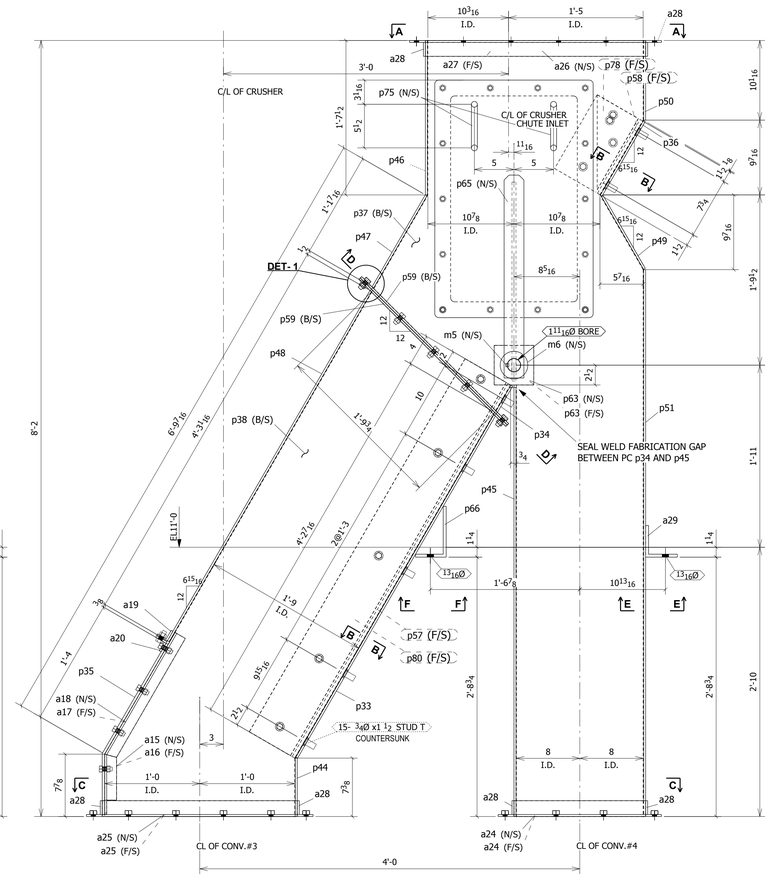

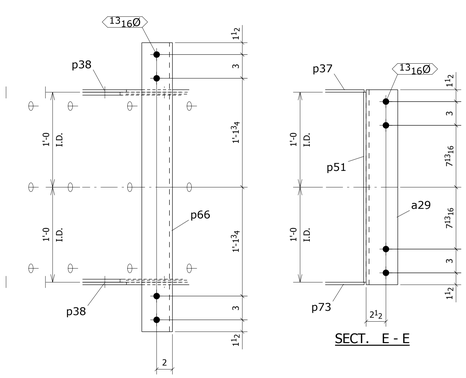

SECT. F - F

SECT. E - E

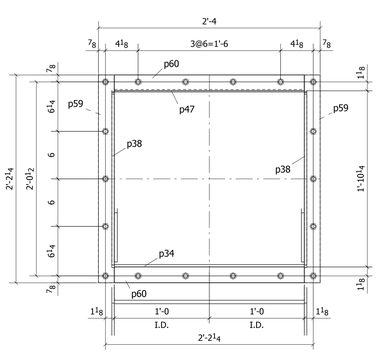

SECT. D - D

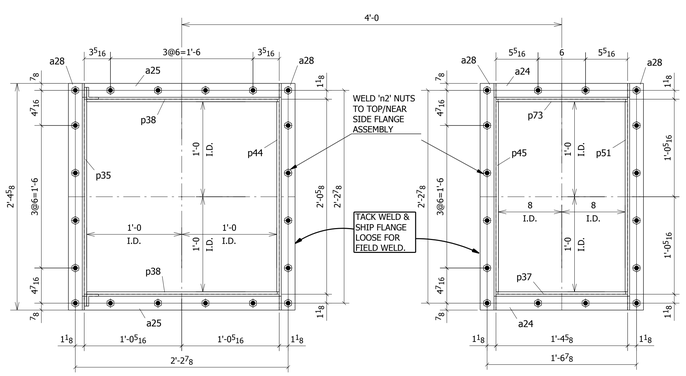

SECT. C - C

1 CHUTE ASSEMBLY(s) MARK: A56

BILL OF MATERIAL

ARK MARK	SHIPPING MARK	ASSY MARK	NO. REQ'D	DESCRIPTION	LENGTH	GRADE	WEIGHT	REMARKS
			1	CHUTE ASSEMBLY				
	A56							
		a15	1	L1-1/2X1-1/2X1/4	0'-7 5/8"	A36	2	
		a16	1	L1-1/2X1-1/2X1/4	0'-7 5/8"	A36	2	
		a17	1	L1-1/2X1-1/2X1/4	1'-5 3/4"	A36	4	
		a18	1	L1-1/2X1-1/2X1/4	1'-5 3/4"	A36	4	
		a19	1	L1-1/2X1-1/2X1/4	2'-3 5/8"	A36	5	
		a20	1	L1-1/2X1-1/2X1/4	2'-3 5/8"	A36	5	
		a24	2	L2X2X1/4	1'-4 5/8"	A36	9	
		a25	2	L2X2X1/4	2'-0 5/8"	A36	13	
		a26	1	L2X2X1/4	2'-3 13/16"	A36	7	
		a27	1	L2X2X1/4	2'-3 13/16"	A36	7	
		a28	6	L2X2X1/4	2'-4 5/8"	A36	46	
		a29	1	L4X4X3/8	2'-0 5/8"	A36	20	SHIP LOOSE
		m3	1	1"11/16Ø SHAFT	0'-4 3/4"	A36	2	
		m4	1	1"11/16Ø SHAFT	0'-6 7/16"	A36	4	
		m5	1	KEY 3/8	0'-2 1/2"	A36	0	IRE
		m6	1	HUB 3"1/2Ø FITN. THRU 1"11/16 B	0'-2"	A36	4	K.S. + S.S.
		n2	36	1/2" HEX NUT		A307	2	
		p33	1	PL5/16X24	4'-1 7/8"	A36	106	
		p34	1	PL5/16X3 13/16	2'-0"	A36	8	
		p35	1	PL5/16X23 5/8	2'-3 5/8"	A36	58	BRAKE
		p36	1	PL5/16X10 7/8	2'-0"	A36	23	
		p37	1	PL5/16X24 1/8	8'-2"	A36	147	
		p38	2	PL5/16X24 13/16	6'-2 3/16"	A36	253	
		p44	1	PL5/16X7 3/8	2'-0"	A36	16	
		p45	1	PL5/16X24	4'-6 1/2"	A36	116	
		p46	1	PL5/16X9 1/2	2'-0"	A36	42	
		p47	1	PL5/16X13 7/16	2'-0"	A36	29	
		p48	1	PL5/16X24	4'-3 1/16"	A36	109	
		p49	1	PL5/16X10 5/8	2'-0"	A36	23	
		p50	1	PL5/16X10 1/16	2'-0"	A36	21	
		p51	1	PL5/16X24	5'-9 1/16"	A36	147	
		p57	1	AR PL3/8X23 1/2	4'-6 7/16"	OSM FA400	136	
		p58	1	AR PL3/8X10 3/4	1'-11 1/2"	OSM FA400	27	
		p59	4	FB1/4X2	2'-2 1/4"	A36	15	
		p60	4	FB1/4X2	2'-0"	A36	14	
		p63	2	PL1/2X5	0'-5"	A36	7	
		p64	1	PL1/2X23 3/4	2'-1 1/8"	A36	85	
		p65	1	FB1/2X2 1/2	2'-1 5/8"	A36	9	
		p66	1	PL3/8X9 9/16	3'-0 1/2"	A36	39	SHIP LOOSE - BRAKE
		p73	1	PL5/16X24 1/8	8'-2"	A36	184	
		p74	1	PL5/16X20	2'-6"	A36	53	
		p75	2	ROD3/4	0'-8 3/16"	A36	2	BEND
		p77	1	AR PL3/8X6	0'-10 3/8"	OSM FA400	3	
		p78	1	AR PL3/8X6	0'-10 3/4"	OSM FA400	7	
		p80	2	AR PL3/8X6	4'-6 7/16"	OSM FA400	70	
						TOTAL =	1880	

DRAWING NOTES:
ALL WELDS 1/4" CONT. UNLESS NOTED
OSM FA400 IS SHORT FOR OREGON STEEL MILLS FORMALLOY 400
WORK THIS SHEET WITH DWG E58

MATERIAL:	HOLE SIZE:	BOLT GRADE:	MINIMUM WELD:	ELECTRODE:
A36 U.N.O.	9/16 Ø U.N.O.	A307 U.N.O.	1/4" U.N.O.	E70XX

PAINT:	SURFACE PREP:	DRY FILM THICK:
U.N.O.		

No.	DATE	REVISIONS
1	8-9-10	ISSUED FOR FAB PER APPROVAL COMMENTS & ADDED LINER PLATES
0		ISSUED FOR FAB PER APPROVAL - ADDED LINER PLATES

FABRICATORS LOGO

STREET
CITY, ST ZIP

PHONE: (555) 123-4567
FAX: (555) 123-4567

Theman, Inc.
jack@paljack.com
Phone 780 295-1960
Fax 780 269-3135
Professional Steel Detailing & Consulting

ARCH.
CONTR. Contractor, Inc. Moose Pass, AK
ENGR.

JOB NAME & LOCATION:
COAL CRUSHER
Fairbanks, AK

REF: HK2570
DRAWN BY: EC DATE: 05/03/10 CHECKED BY: JP DATE: 05/04/10
SHEET TITLE
DETAILS - CRUSHER CHUTES IN SAMPLING

JOB: HK2570
SHEET: 56
0